UZ-IJAK Magazine

ISSUE 50 DECEMBER 1990

FROM ME TO YOU

Here we are again with another issue of VZ LINK for your education and delight.
I would like to thank all those that made the effort to attend the Workshop. It is sure good to see you all again.

THIS ISSUE.. We have the following programs :-

Depth charge written by Ken Clarke.
VZ Cup from the Micro Magic series.
Maze of Doom (Part 1) written by Steve Dale.

We also have a Zero Power Ram project from Joe Leon.
And a Software Review from Matthew Taylor.
Lastly we update our VZ LINK index.

NEXT ISSUE..

We continue the Maze of Doom program.
We bring you a Base Converter program from Dave Mitchell.
Robert Quinn ask's the question " Is this a video disk? "
We also premiere our new cover.

NEXT YEAR..

I have a series of programs written by Bob Kitch, which I will start to publish in the new year.
I also have some other bits and pieces to keep us going for the first couple of issues.
However I would still like to see some more members items in our newsletter.
I can only keep this newsletter going with your support.
It's been great over the the last four years. Let's see if we can keep it up for another four.

The first Meeting/Workshop for 1991 will be held in February.

Well I think thats enough to keep you tuned, don't you?.

I would like to wish all members and their families a

VERY MERRY CHRISTMAS and a HAPPY NEW YEAR.

Have a good holiday and stay safe. I want to see you all next year.

P.O BOX 1972 C.P.O AUCKLAND N.Z

(C) AUCKLAND VZ 300/200 COMPUTER USERS CLUB (1986)
NEW ZEALAND VZ 300/200 COMPUTER USERS CLUB (1989)

ALL MATERIAL IN THIS NEWSLETTER IS SUBJECT TO COPYRIGHT.
CONTRIBUTED PROGRAMS & ARTICLES CAN BE REPRODUCED ON THE UNDERSTANDING THAT IT IS FOR THE PRIVATE USE OF SUBSCRIBERS ONLY.
COPYRIGHT IS ALWAY'S RETAINED BY THE AUTHOR.
THIS CLUB WILL NOT BE HELD RESPONSIBLE FOR ANY BREECHING OF COPYRIGHT CAUSED BY THE PUBLICATION OR USE OF ANY MATERIAL SENT IN UNDER A FALSE NAME.

YOU ARE WELCOME TO PHONE ME IF YOU HAVE PROBLEMS.
PHONE 761-451 AFTER 6.00 PM.

Depth Charge Game

-by Ken Clarke.

Picture a co-ordinate system. Now, make believe that it is a section of the ocean. You may make this section as large or as small as you like, but the co-ordinate origin (0,0,0 as Y,X, Depth) will always be in the southeast corner (on the surface) of the ocean.

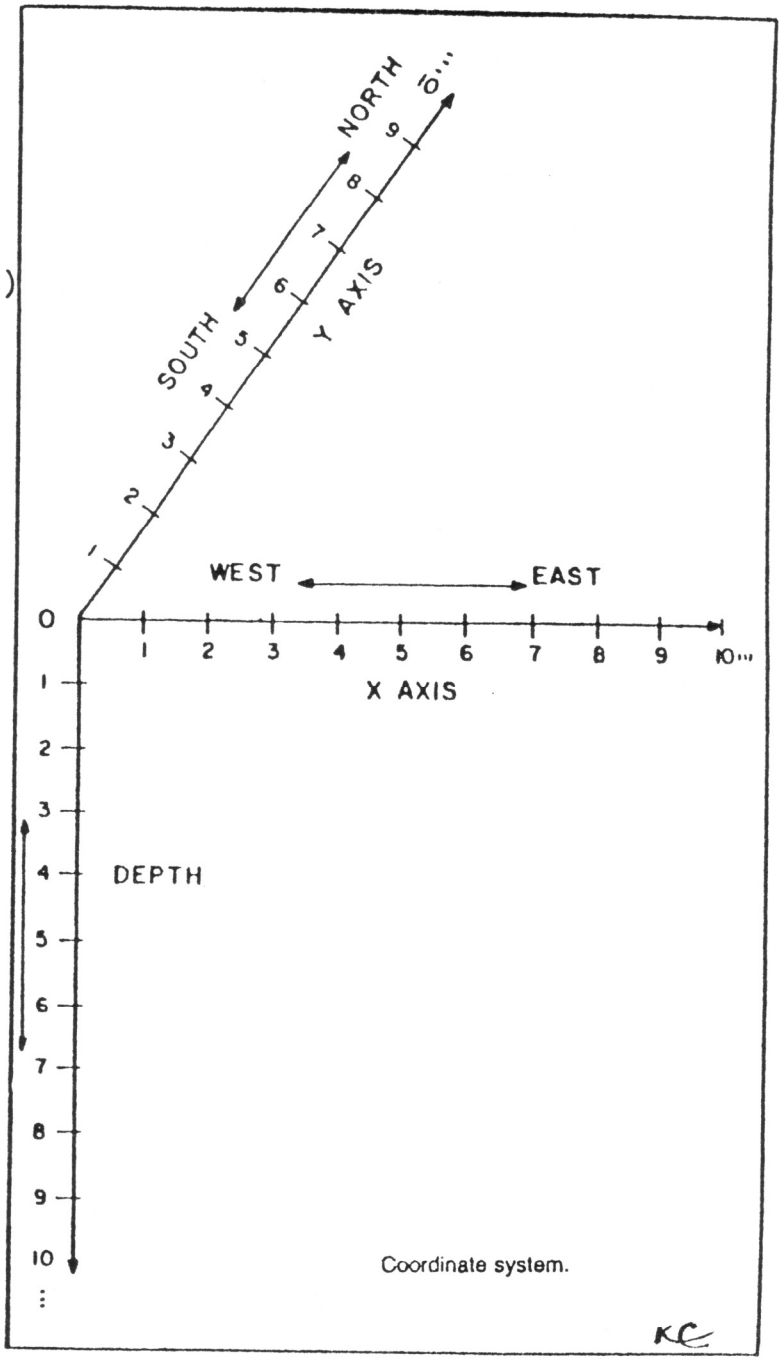

Coordinate system.

Somewhere within the boundaries of this section of ocean lies the evil Klingon (Why not? We blame them for just about everything else) torpedo base. The base does not move, but it does pose a threat to world peace (sound familiar?) by torpedoing the passing unfriendly (to them) shipping. However, in typical Klingon style, it takes them a while to zero in before they can fire. The amount of time it takes to zero in is directly proportional to the size of the section of ocean you have selected. In other words, the larger the area, the more time you have to get them before they get you.

You are the Captain of a Depth Charge Carrying destroyer. Your mission is to rid the seas of the evil Klingon torpedo base by destroying it with the ship's depth charges. This is accomplished by entering the detonation co-ordinates of a depth charge and using the ship sonar reports to find the location of the base.

The request 'detonation co-ordinates?' ("SPLASH ..... THUMP") is a request to enter the three numbers where you think the base is. Type a Y (north/south) co-ordinate, an X (east/west) co-ordinate and a Depth (zero is the surface) co-ordinate, in that order, but remember to separate each with a comma.

You will then get a sonar report telling where your shot was in relation to the target. For example, if sonar reported the depth charge was "SOUTH," "EAST" and "TOO HIGH", the next shot would have more north (larger Y co-ordinate), further west (smaller X co-ordinate) and deeper (larger Depth co-ordinate). I use Y,X,Depth instead of X,Y,Depth because people are used to saying southeast, right?

Anyway, so the game goes until either the evil Klingon base is destroyed by a depth charge ("BLAM!"), or tne Klingons finally zero in and torpedo you ("WHOOSH ... KERBOOM!").

THE DEPTH CHARGE GAME - by Ken Clarke.

```
5 CLS:PRINT@64,"*THIS IS THE DEPTH  CHARGE GAME*":PRINT
10 REM "[redacted]
20 PRINT"YOU ARE CAPTAIN OF A DESTROYER  LOOKING FOR THE EVIL ";
25 PRINT"KLINGON    UNDERWATER TORPEDO BASE.":PRINT
30 PRINT"YOUR JOB IS TO DESTROY THE BASE USING YOUR DEPTH ";
35 PRINT"CHARGES, BEFORETHE KLINGONS ZERO IN AND TORPEDOYOU ";
40 PRINT"AND TAKE OVER THE SEAS."
45 FORQ=1TO5000:NEXT:PRINT:PRINT
50 PRINT"YOU MAY SPECIFY THE MAXIMUM     SEARCH AREA BY GIVING"
55 PRINT"THREE NUMBERS---":PRINT
60 PRINT"---ONE FOR THE Y AXIS NTH/STH"
65 PRINT"---ONE FOR THE X AXIS EAST/WEST"
70 PRINT"---AND ONE FOR DEPTH."
75 PRINT
80 PRINT"THE LARGER THE SEARCH AREA THE  MORE SHOTS YOU GET--";
85 PRINT"-BEFORE THE KLINGONS ZERO IN AND TORPEDO YOU"
90 PRINT:PRINT:FORQ=1TO5000:NEXT:CLS:PRINT
95 PRINT"TO MAKE A SHOT, ENTER THE THREE NUMBERS (Y,X,DEPTH),";
100 PRINT"WHERE YOU   THINK THE BASE IS.":PRINT
105 PRINT"THE SHIPS SONAR WILL REPORT BACKWHERE THE SHOT WAS ";
110 PRINT"IN RELATION  TO THE BASE.":PRINT@264,"---GOOD LUCK---"
120 REM SET UP CONDITIONS
125 PRINT:PRINT@326,;
130 INPUT"MAXIMUM SEARCH AREA              (Y,X,DEPTH)";A,B,C
150 Y=RND(A):X=RND(B):Z=RND(C)
160 REM SHOT LIMIT
170 S=INT((A+B+C)/5):FORL=1TOS
180 REM START SHOOTING
185 FORQ=1TO5000:NEXT:CLS
190 IFL=S-1,PRINT@145,"BETTER HURRY..."
195 IFL=S-1,PRINT@212,"THEY ARE":PRINTTAB(17);"ZEROING IN FAST"
200 PRINT@2,;
210 INPUT"DETONATION CO-ORDINATES                  ";D,E,F
230 PRINT@41,"          ":PRINT@75,"SPLASH!"
235 FORH=1TO10:PRINT"                I":NEXTH
250 PRINT@309,D;E;F:PRINT@430,"* THUMP!"
255 REM SONAR REPORT
260 FORQ=1TO1000:NEXT:PRINT@448,"SONAR REPORT.  ";
265 IFD<>Y,345
270 IFE<>X,355
275 IFF<>Z,365
280 FORQ=1TO1000:NEXT:CLS
290 FORJ=1TO50:POKE28672+RND(511),106:NEXT
310 PRINT@204,"> BLAM <"
315 FORQ=1TO1000:NEXT
320 PRINT@263,"STATION DESTROYED"
330 PRINT@327,"THE WORLD IS SAFE":PRINT
340 GOTO440
345 IFD<Y,PRINT"****SOUTH";
350 IFD>Y,PRINT"****NORTH";
355 IFE<X,PRINT"****WEST";
360 IFE>X,PRINT"****EAST";
365 IFF<Z,PRINT@499,"TOO HIGH****";
370 IFF>Z,PRINT@499,"TOO LOW****";
375 NEXTL
380 FORQ=1TO1000:NEXT:CLS
390 PRINT@132,"W-H-O-O-S-H-----------------"
400 FORQ=1TO1000:NEXT:FORK=1TO15
410 POKE28672+RND(511),249
415 POKE28672+RND(511),100:NEXTK
420 PRINT@262,"   [redacted]"
430 PRINT@458,"YOU HAVE BEEN HIT.... ABANDON SHIP....."
440 PRINT"     TRY AGAIN? - HIT <SPACE>"
450 IFINKEY$<>" ",450ELSECLS:GOTO125
```

NOTE spacing to prevent word wrap around...

(14s)

(16s)

(9s)

(1s)

(2s)

(5s)

(1s)

YE CUP

```
10 '"[illegible] FROM
20 '"[illegible]  [illegible]  [illegible] MICRO
30 '"[illegible] MAGIC
40 CLS:COLOR,0:CLEAR300
50 DIMN$(6),C(6),H$(6),P(6),M(24),P$(6)
60 SP$="                                  "
70 '"[illegible]
80 FORN=1TO6
90 READN$(N)'NAME
100 READC(N)'COLOR CODE
110 READH$(N)'HORSE
120 READP(N)'STARTING POS.
130 D(N)=RND(10)'ODDS
140 DD(N)=D(N)'MOVEMENT ODDS
150 IFDD(N)<3ANDRND(3)=1THENDD(N)=10'LONG SHOT
160 R=R+D(N)
170 NEXT
180 FORN=1TO6:READP$(N):NEXT
190 R=R+D(N)
200 GOSUB1320
210 GOSUB740
220 '"[illegible]
230 GOSUB1260
240 COLOR1
250 FORN=93TO413STEP32:PRINT@N," ";:NEXT
260 FORN=1TO6:COLORC(N):PRINT@P(N),H$(N);:NEXT
270 PRINT@450,"[illegible]NDER STARTER'S ORDERS . .";
280 SOUND11,6;11,3;11,3;11,3;16,6
290 PRINT@450,"[illegible]HEY'RE OFF! . . .          ";
300 '"[illegible]
310 FORN=1TO6:GOSUB340:COLORC(N):PRINT@P(N)+M(N),H$(N);:NEXT
320 IFW=99THEN430
330 GOTO310
340 'MOVEMENT'
350 IFRND(3)=1THENRETURN
360 IFRND(4)=1THENIFDD(N)<2THEN380
370 IFRND(DD(N))<2THEN390
380 M(N)=M(N)+1:GOTO400
390 IFRND(3)=1THENM(N)=M(N)+1
400 IFM(N)=24THENW=99
410 IFM(N)>3THENPRINT@450,"                        ";
420 RETURN
430 '"[illegible]
440 FORN=1TO4:SOUND28,1;25,1:NEXT:SOUND28,6
450 FORT=1TO4000:NEXT:SOUND16,4
460 GOSUB1260:COLOR5
470 PRINT@65,"[illegible]";
480 P=1:PO=130:WN=0
490 FORX=24TO1STEP-1
500 FORN=1TO6
510 IFM(N)<>XTHEN570
520 WN=99
530 COLORC(N)
540 PRINT@PO,P$(P);" ";H$(N);"  ";N$(N);
550 PRINT@PO+23,;:PRINTUSING"##:1";INT(R/D(N))
560 PO=PO+32
570 NEXT
580 IFWN=99THENP=P+1:WN=0
590 NEXT
600 COLOR7
```

CONTINUED ON NEXT PAGE

```
610 FORT=1TO4000:NEXT:SOUND16,4
620 GOSUB1100:COLOR7
630 PRINT@417,"[illegible]? Y/N";
640 I$=INKEY$:IFI$=" "THEN640
650 IFI$="N"THENRUNELSEIFI$<>"Y"THEN640
660 '"[illegible]
670 GOSUB1260
680 R=0:W=0
690 FORN=1TO6:D(N)=RND(10):DD(N)=D(N):
700 IFDD(N)<3ANDRND(3)=1THENDD(N)=10
710 R=R+D(N):M(N)=0:NEXT
720 SG=99
730 GOTO210
740 '"[illegible]
750 GOSUB1260:COLOR5
760 PRINT@67,"[illegible]";
770 PO=98
780 FORN=1TO6
790 PO=PO+32
800 COLORC(N)
810 PRINT@PO,H$(N);"  ";N$(N);
820 PRINT@PO+19,;:PRINTUSING"##:1";INT(R/D(N))
830 NEXT
840 IFSG=99THEN940
850 PRINT@355,"HOW MANY PUNTERS (1-10)";
860 INPUTNB$
870 NB=VAL(NB$)
880 IFNB<1ORNB>10THENPRINT@379,"    ";:GOTO850
890 PRINT@355,"ENTER NAMES OF PUNTERS     ";
900 FORN=1TONB:PRINT@430,SP$;:PRINT@419,"PUNTER NO.";N;
910 INPUTBN$(N)
920 BN$(N)=LEFT$(BN$(N),14)
930 NEXT
940 PRINT@355,"ENTER HORSE NUMBER AND BET";
950 FORN=1TONB
960 PRINT@387,"                    "
970 PRINT@387,"FOR ";BN$(N);
980 PRINT@419,SP$;
990 PRINT@419,"HORSE NO.";
1000 INPUTHN$
1010 HN(N)=VAL(HN$)
1020 IFHN(N)<1ORHN(N)>6THEN980
1030 PRINT@432,"BET ";
1040 INPUTA$
1050 BA(N)=VAL(A$)
1060 IFBA(N)<1THEN1030
1070 NEXT
1080 RETURN
1090 GOTO1090
1100 '"[illegible]
1110 FORN=1TONB
1120 IFM(HN(N))=24THENW(N)=W(N)+INT((R/D(HN(N))))*BA(N)
1130 IFM(HN(N))<>24THENW(N)=W(N)-BA(N)
1140 NEXT
1150 GOSUB1260
1160 PRINT@66,"[illegible]";
1170 PO=130
1180 FORN=1TONB
1190 PRINT@PO,;
1200 PRINTUSING"%        %+$$########,###";BN$(N);W(N)
1210 PO=PO+32
1220 NEXT
1230 RETURN
1240 FORN=1TONB:PRINT@387,"FOR ";BN$(N);:PRINT@419,SP$;
1250 GOTO1250
```

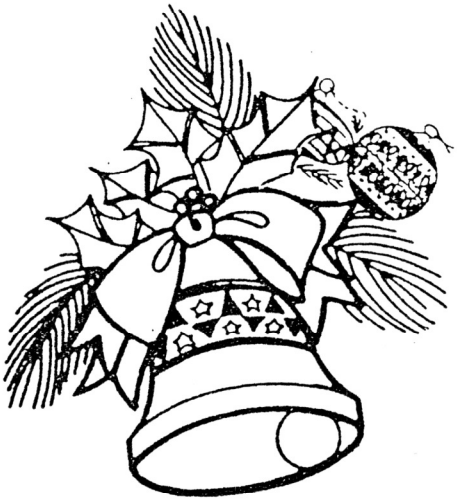

```
1260 '"[illegible]
1270 FORN=65TO449STEP32
1280 PRINT@N,SP$;"  ";
1290 NEXT
1300 RETURN
1310 GOTO60
1320 '"[illegible]
1330 GOSUB1400
1340 COLOR7
1350 PRINT@195,"[illegible]HE BIG RACE IS ABOUT TO";
1360 PRINT@227,"BEGIN! CHOOSE YOUR HORSE";
1370 PRINT@259,"AND PLACE YOUR BET.";
1380 FORT=1TO4000:NEXT:SOUND16,4
1390 RETURN
1400 '"[illegible]
1410 COLOR8
1420 PRINT@1,"[illegible]";
1430 PRINT@449,"[illegible]";
1440 FORN=33TO417STEP32
1450 PRINT@N,"[illegible] ";
1460 PRINT@N+29," [illegible]";
1470 NEXT
1480 RETURN
1490 DATA"PETER KIWI",4,"  [illegible] ",65
1500 DATA"DARWIN STAR",3," [illegible]",129
1510 DATA"FRISKY JOE",8," [illegible]",193
1520 DATA"SNOW JOKE",5," [illegible]",257
1530 DATA"TRICKY DICKY",2," [illegible]",321
1540 DATA"MICRO MAGIC",7," [illegible]",385
1550 DATA"1ST","2ND","3RD","4TH","5TH","6TH"
```

SOFTWARE REVIEW

BY MATTHEW TAYLOR

Hackers Delight is a powerful utility program for the VZ which was sold by Celestron software. (Celestron no longer operates).

The program is only available on disk for obvious reasons, but this is by no means a major barrier to usage.
Upon running the boot program the disk drive loads a colourful and well designed title page. It features Hackers Delight written in red in the sky over the sun and clouds. Below this is a boat anchored in the distance near an island and in front of this is another small island with a large palm tree on it. Foaming blue water surrounds all this.
When any key is pressed the disk drive activates and the central menu is loaded. You are given three options on this menu. These are :-

1. Program Copier
2. Disassembler
3. Z-80 Monitor

The program copier is basically the same as any other.
The menu options are :-

<L> Load a program
<T> Save a text program
<B> Save a binary program
<P> Program information
<D> Tape to Disk transfer
<Q> Return to central menu

< CONTINUED ON NEXT PAGE >

Commands L, T, B and Q are self explanatory, but the commands P and D need a little explanation.

The <P> command gives information about the program just loaded. This information includes the start and end addresses of the program loaded in decimal and hexadecimal. The amount of memory taken up by the program is given in bytes and kilobytes also.
If any key is pressed (other than <M>) you will be asked if you wish to change the start address pointer. If a reply of yes is given then you must input the new address in hexadecimal. It then asks the same thing about the end address before returning to the menu.

The <D> command allows for the transfer of binary programs, that have been loaded on tape, to disk. The program stops and asks you to type the following line in and press return.

BSAVE"program name",ssss,eeee

Substitute the program name for what you want to call it. (you are still restricted to 8 char.) and ssss and eeee for the given start and end addresses. Disk drive owners should be familiar with this process and the use of this DOS command.

The second option of the central menu is the disassembler.
Once loaded the program immediately asks for the start address of disassembly. This is followed by the end address and output to printer option. The program then proceeds to disassemble memory from the start address onwards into standard mnemonics.
If you chose output to printer the disassembly will go to the printer, as well as the screen. The command <S> will pause disassembly at any time and <C> will continue it again.
The <A> command will abort disassembly and you will be asked if you wish to return to the central menu or go to disassembly.
When disassembly reaches the input end address, the computer will print the total number of bytes and instructions on the screen (if printer is being used it will be printed there as well).

The third and final option on the central menu is the Z-80 monitor.
The sub-menu for this has the options (A - H). These are :-

<A> View memory
<B> Alter memory
<C> Relocate memory
<D> Execute memory
<E> Hex - Decimal
<F> Decimal - Hex
<G> View and search
<H> Return to menu

I won't go into detail with each, but here are some points to remember.
All entering is done in hexadecimal.
Data is entered and viewed in lots of 8 bytes.
when altering memory, if you wish a byte to remain the same hit return rather than typing it again.
Remember : To save your program before execution, otherwise you may lose it. Make sure you know what you are doing before attempting block memory moves.

Basically the order of tasks in fiddling with a program are to load it with program copier, look at it with the disassembler if you need to, alter it with the Z-80 monitor and save it again with program copier.
This is a very appropriately named program and is worth getting a hold of if you can.

ZERO POWER RAM BY JOE LEON

This B.B.RAM project uses the MK48Z02 2K ZERO POWER RAM with built in batteries. It's much simpler to construct than our previous B.B.RAM project. (see issue 44 VZ LINK)

Only 2 switches and two Resistors are needed. If you have a VZ200 then you can get a CS signal from the internal 74LS139, otherwise a 74LS138 decoder chip is needed. Like the previous project it is designed for the 6000 - 67FF HEX range. My thanks to Dave Boyce for letting us use the 74LS138 decoding circuit again.

The easiest way to construct is to piggy back it on an 8K or 16K ROM inside the VZ200/300 or you may prefer to use your own construction methods.
The piggyback method of construction is much simpler as most of the connections to the Address and Data buses are automatic when you piggy back. The pinouts of both ROMs are shown. As usual, take care as mistakes are easy to make.
The reason for the CS switch is that if you have a CART.W.P then you can switch out the B.B.RAM so the CART.W.P will work.

I must warn you. the MK48Z02 is expensive at $34.50 (Aust $). You may prefer an ordinary 6116 CMOS 2K RAM at around $4.00 which is pin compatible with the MK48Z02. The choice is yours. If you use a 6116 2K RAM then the WR (WRITE) switch and pull up resistor are not needed and of course you lose any routines stored there when power is switched off, but not with the MK48Z02.

You might ask, " what use can I put it to "?. One use is to put Dave Mitchell's Extended DOS in there, after first purchasing it of course. Other utilities that could go there are Monitors, Extended Basics, Etc.
The MK48Z02 is ideal to develop your routines in as you write and erase as often as you like. When debugged the MK48Z02 can simply be unplugged and put in an Eprom Programmer/Copier for transfer to Eprom.

NOTE :- With the WRITE Switch open the MK48Z02 behaves like an Eprom as you no longer can WRITE to it, only READ.
Battery life is estimated at around 3 to 10 years after which it behaves like a normal CMOS RAM.

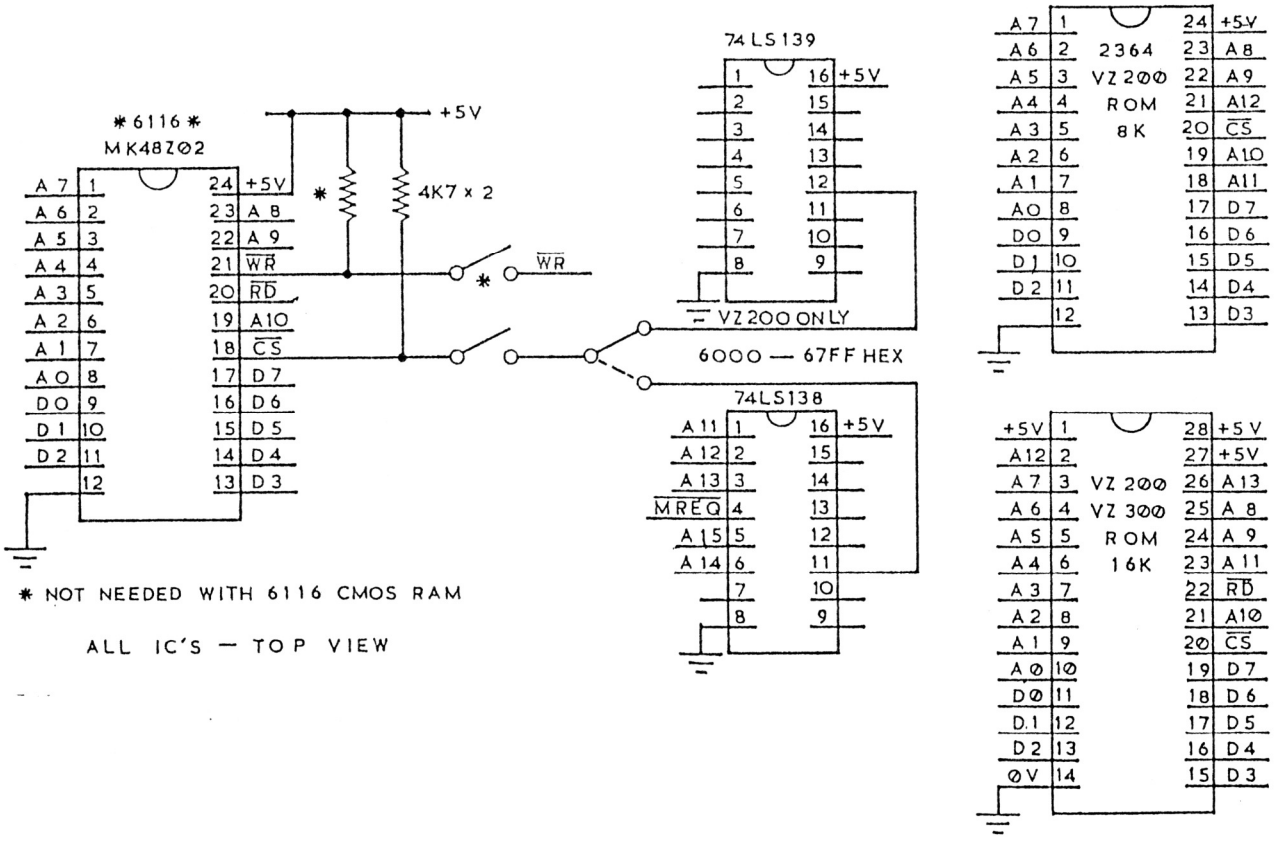

MAZE OF DOOM

PART 1

```
10 REM MAZE OF DOOM!!!!!
20 REM BY STEVE DALE
30 CLS
32 SOUND 30,3:SOUND10,3
45 LET U=0
90 CLS:SIREN=0
100 GOSUB10000:REM OUTLINE
105 GOSUB3000:REM TITLE
106 GOSUB4000:REM INSTRUCTIONS
110 GOSUB2000:REM INITAL VALUES
120 COLOR,0
140 FORI=1TO30STEP3:SOUNDI,1:NEXTI
145 CLS:PRINT"YOU ARE AT THE ENTRANCE TO THE"
150 PRINT"MAZE.   YOU MUST FIND YOUR WAY"
160 PRINT"THROUGH AND FREE THE PRINCESS"
170 PRINT"OR DIE IN THE ATTEMPT!!!"
180 PRINT"PRESS ANY KEY TO BEGIN!":GOSUB50000
190 SOUND31,4
200 CLS
201 PRINT:PRINT:PRINT"   *********YOU ENTER*******"
202 PRINT"AND ARE FACED WITH THREE PATHS"
203 PRINT"NORTH, EAST AND WEST."
204 PRINT"WHICH PATH? NORTH, WEST OR EAST"
205 GOSUB5000
206 IFD$="N"THEN220
207 IFD$="E"THEN240
208 IFD$="W"THEN260
210 GOSUB999:GOTO204
220 GOSUB915
221 PRINT"YOU WALK FOR A SHORT DISTANCE,":IFGG=1THEN239
222 PRINT"AND FIND YOURSELF IN A SMALL"
223 PRINT"ALCOVE WHERE STANDS A STRANGE"
224 PRINT"DARK-CLAD FIGURE.   AS YOU "
225 PRINT"ENTER IT SPEAKS,'I AM THE"
226 PRINT"GUARDIAN OF THE MAZE!!"
227 PRINT"YOU MAY NOT ENTER!!!!"
228 PRINT"THERE IS NO ALTERNATIVE; YOU ":GOSUB51000
229 PRINT"MUST FIGHT!!  HIT RETURN!":INPUTT$:GOSUB1000:LET GG=1
230 CLS:PRINT"YOU SINK TO THE FLOOR.":GOSUB15050
232 PRINT"THE ALCOVE IS AT A CROSSROADS"
233 PRINT"YOU MAY GO NORTH,SOUTH,EAST OR"
234 PRINT"WEST.  WHICH WAY?":GOSUB5000
235 IFD$="S"THEND$="E":GOTO271
236 IFD$="E"THENGOTO240
237 IFD$="W"THENGOTO260
238 IFD$="N"THENGOTO280ELSEGOSUB999:GOTO234
239 PRINT"YOU'RE BACK IN THE GUARDIANS ALCOVE.":GOTO232
240 REM **MANTICORE**
241 GOSUB912
242 PRINT"YOU FIND YOURSELF IN A LARGE"
243 PRINT"ROOM WITH A DOOR ON EACH SIDE.":IFMM=1THENGOTO249
244 PRINT"A HUGE FIGURE RISES FORM THE"
245 PRINT"FAR CORNER!!  IT'S A MANTICORE!"
246 PRINT"HALF LION AND HALF EAGLE, IT IS"
247 PRINT"A FORMIDABLE FOE!  YOU MUST ":GOSUB51000
248 PRINT"FIGHT IT!  HIT RETURN!";:INPUTT$:GOSUB1000:CLS:MM=1
249 PRINT"THE MANTICORE LIES ON THE FLOOR"
250 PRINT"DEAD.   YOU MAY LEAVE BY THREE"
```

CONTINUED ON NEXT PAGE

```
251 PRINT"DOORS, ONE TO THE NORTH, ONE"
252 PRINT"TO THE WEST AND ONE TO THE EAST";:GOSUB5000
253 IFD$="W"THEND$="E":GOTO271
254 IFD$="N"THENGOTO400
255 IFD$="E"THENGOSUB670:GOTO240
256 GOSUB999:GOSUB5000:GOTO253
260 REM ***UNICORN***
261 GOSUB902
262 CLS:PRINT"YOU ARE IN A LARGE ROOM IN THE"
263 PRINT"CENTER OF WHICH IS A LARGE":IFUU=1THENGOTO275
264 PRINT"UNICORN!!   IT RISES TO FIGHT!"
265 PRINT"YOU MUST BATTLE!   HIT RETURN ":GOSUB51000
266 PRINT"TO BEGIN BATTLE!!!":INPUTT$:GOSUB1000
267 CLS:PRINT"YOU COLLAPSE ON THE FLOOR. ":GOSUB15050:LET UU=1
268 PRINT"THERE ARE TWO ENTRANCES: NORTH"
269 PRINT"AND EAST.  WHICH ONE";:GOSUB5000
270 IFD$="N"THEN280
271 IFD$="E"THENPRINT"YOU ARE BACK AT THE ENTRANCE!":GOTO201
272 GOSUB950:GOSUB5000:GOTO270
275 PRINT"CORPSE OF A UNICORN.":GOTO268
280 GOSUB960:PRINT"YOU ARE AT A 'T' JUNCTION."
281 PRINT"A LARGE BLACK SHAPE LIES IN"
282 PRINT"THE CORNER...":IFSCA=1THEN286
283 PRINT"IT'S A GIANT SCARAB BEETLE!!!!":SCA=1
284 PRINT"YOU MUST FIGHT IT! HIT RETURN";:INPUTT$:GOSUB1000
285 PRINT"PHEW!!  OK, THAT'S THAT!":GOTO290
286 PRINT"IT'S THE CORPSE OF THE GIANT"
287 PRINT"SCARAB BEETLE.  THERE IS"
288 PRINT"NOTHING MORE OF INTREST IN"
289 PRINT"THE ROOM."
290 PRINT"YOU MAY GO NORTH, SOUTH OR WEST";:GOSUB5000
291 IFD$="S"THENGOTO220
292 IFD$="N"THENGOTO300
293 IFD$="W"THENGOTO260
294 GOSUB999:GOSUB5000:GOTO290
300 PRINT"YOU ARE IN A SMALL ROOM WHICH"
302 PRINT"IS COMPLETELY BARE.  YOU LOOK"
304 PRINT"AROUND, AND SUDDENLY YOU SEE"
305 PRINT"A FORM MATERIALISING ABOVE YOU!"
306 PRINT"IT IS A JORLAX!!!"
307 PRINT"THESE MONSTERS ARE EVIL SPIRITS"
308 PRINT"AND YOU CAN ONLY A)FIGHT OR "
309 PRINT"B)FLEE.  WHICH WILL YOU DO?":INPUTT$
310 IFT$="B"THENGOTO344
311 PRINT"YOU DRAW YOUR SWORD, BUT IT IS"
312 PRINT"NO GOOD; YOU CANNOT FIGHT A "
313 PRINT"SPIRIT!  YOUR SWORD STROKES "
314 PRINT"PASS RIGHT THROUGH THE FIGURE"
315 PRINT"AS IT HANGS OVER YOU."
320 PRINT"THEN IT BEGINS TO DECEND....."
330 PRINT"YOU FEEL YOUR SOUL BEING DRAWN"
331 PRINT"FROM YOUR BODY!   YOU WILL LIVE"
332 PRINT"BUT IT WILL BE AS A VEGETABLE"
333 PRINT"YOU WILL BE AND KNOW NO MORE..."
334 PRINT:GOSUB54000:GOTO1520
344 PRINT"YOU HAVE FOUR PATHS,NORTH,EAST,";
345 PRINT"WEST, AND SOUTH.";:GOSUB5000
350 IFD$="S"THENGOTO280
352 IFD$="W"THENGOTO500
354 IFD$="N"THENGOTO357
```

CONTINUED ON NEXT PAGE

```
355 IFD$="E"THENGOTO411
356 GOSUB999:GOSUB5000:GOTO350
357 PRINT"YOU ENTER A BIG ROOM, AND SEE"
358 PRINT"A LARGE SEA-CHEST IN THE MIDDLE"
359 PRINT"WILL YOU STOP AND HAVE A LOOK"
360 PRINT"(S), OR WILL YOU GO ON(O)";:GOSUB5000
361 IFD$="O"THEN375
362 IFD$="S"THEN364
363 GOSUB999:GOSUB5000:GOTO361
364 CLS:PRINT"AS YOU OPEN THE LID OF THE "
365 PRINT"CHEST, A STRANGE FEELING COMES"
366 PRINT"OVER YOU...":SOUND3,5:SOUND2,6:SOUND1,8
367 PRINT"YOU SUDDENLY RECALL A STORY OF"
368 PRINT"A STRANGE 'CHEST OF DREAMS',"
369 PRINT"WHICH WILL PUT YOU TO SLEEP AND"
370 PRINT"IN A COMA FOR THE REST OF YOU"
371 PRINT"LIFE!   YOU KNOW NO MORE....."
372 FORI=1TO500:NEXT:GOTO1520
375 PRINT"THERE ARE TWO EXITS: NORTH AND"
376 PRINT"SOUTH";:GOSUB5000
377 IFD$="N"THEN800
378 IFD$="S"THEN300
400 PRINT"YOU ARE AT A 'T' JUNCTION.":GOSUB782
401 PRINT"YOU MAY GO EAST, WEST OR SOUTH";:GOSUB5000
402 IFD$="E"THENGOTO410
403 IFD$="W"THENGOTO440
404 IFD$="S"THENGOTO240
405 GOSUB999:GOSUB5000:GOTO402
410 REM ****SIRENS****
411 PRINT"YOU HAVE COME OUT ONTO A BEACH":IFSIREN=1THENGOTO430
412 PRINT"IT IS QUITE HOT, AND YOU "
413 PRINT"FEEL LIKE A SWIM.  BUT JUST AS"
414 PRINT"YOU ARE ABOUT TO DIVE,YOU HEAR"
415 PRINT"BEAUTIFUL WOMEN'S VOICES!  ":GOSUB51000
416 PRINT"THEY SEEM TO BE PULLING"
417 PRINT"YOU INTO THE WAVES! YOU REALISE"
418 PRINT"THEY ARE SIRENS!!!":FORI=1TO2000:NEXTI:PRINT"YOU HAVE"
419 PRINT"UNTIL THE SCALE STOPS TO PRESS"
420 PRINT"<<SPACE>>TO ESCAPE!..........."
421 FORP=1TO31:SOUNDP,1:IFINKEY$=" "THENGOTO425ELSENEXTP
422 CLS:PRINT"YOU FAILED!!  YOU ARE UNDER THE"
423 PRINT"SPELL OF THE SIRENS AND SINK"
424 PRINT"BELOW THE WAVES.....":GOSUB54000:GOTO1530
425 PRINT"WHEW!THAT WAS CLOSE!WELL DONE!":SIREN=1
426 PRINT"YOU HAVE TWO WAYS ON, NORTH OR"
427 PRINT"SOUTH.   WHICH WAY";:GOSUB5000
428 IFD$="S"THENGOTO400
429 IFD$="N"THENGOTO450ELSEGOSUB999:GOSUB5000:GOTO428
430 PRINT"YOU RECOGNISE IT AS THE SIREN'S"
431 PRINT"BEACH.   BUT THE SIRENS ARE"
432 PRINT"SILENT.   YOU QUICKLY MAKE YOUR"
433 PRINT"WAY BACK!":GOTO426
440 PRINT"YOU ARE AT A CROSSROADS.":GOSUB460
441 PRINT"YOU MAY GO NORTH, SOUTH, EAST,"
442 PRINT"OR WEST.";:GOSUB5000
443 IFD$="N"THENGOTO700
444 IFD$="S"THENGOTO400
445 IFD$="E"THENGOTO450
446 IFD$="W"THENGOTO300
447 GOSUB999:GOSUB5000:GOTO443
```

PART 2 NEXT ISSUE

NEWSLETTER INDEX - ISSUES 41 TO 48

ISSUE 41..

PROGRAM - WANKEL ROTARY COMBUSTION ENGINE (KEN CLARKE)
PROGRAM- RATTLE SNAKE (Full listing)
MICRO MAGIC (Extended Basic)

ISSUE 42..

RTTY MODIFICATION (disabling the GLASS RTTY unit)
MICRO MAGIC (MICRODATA)
PROGRAM - CONVERSION FACTORS (LOU ELLMERS)

ISSUE 43..

BEGINNERS (Learning to program, the why, who, what)
PROGRAM - NARRATION FILE CREATOR (STEVE DALE)
PROGRAM - MICRODATA (Full listing)
PROGRAM - HI SCORE REGISTER (PETER HILL)
DISK DRIVE HEAD PARK ROUTINE (DAVE MITCHELL)
NEWSLETTER INDEX ISSUES (34 TO 40)

ISSUE 44..

PROGRAM - THE FISHERMAN (KEN CLARKE)
MICRO MAGIC (Plotter, Alphabetical sort, Sound effects)
ERROR HANDLING (Reprinted from Ve Zee news)
BEGINNERS (Memories)
BATTERY BACK UP PROJECT (DAVE BOYCE)
MAIL LIST UPDATE (PETER PATTERSON)

ISSUE 45..

PROGRAM - DONKEY KONG (KEN CLARKE)
MICRO MAGIC (MODE(1), Run and Read, Set, Reset, Point)
MICRO MAGIC (MICRO MAZE)
EXTRA KEYS PROJECT
MAILLIST ENHANCEMENTS (PETER PATTERSON)
BEGINNERS (Sorting out data)

ISSUE 46..

PROGRAM - RESISTOR FINDER (KEN CLARKE)
MICRO MAGIC (MODE(1) Continued)
SOFTWARE REVIEW TEAPOT (BRENDA HILL)
SOFTWARE REVIEW PCB MINICAD DESIGNER
PROGRAM - TEAPOT TED
PROGRAM - RESTORE (DAVE MITCHELL)
BEGINNERS (Peripherals)

ISSUE 47..

PRINT / LPRINT SWITCH (R.QUINN)
MICRO MAGIC (Sorting) MICROSORT and OTHELLO Programs)
SETTING UP THE NEW DOS EPROM (PETER PATTERSON)
PROGRAM - DR WHO (EDWIN PATTERSON)
PROGRAM - TUNE HOLDER (PETER HILL)
BEGINNERS (Avoiding trouble with disks)

ISSUE 48..

ADDENDUM FOR THE VZ BASIC REFERENCE MANUALS (PETER PATTERSON)
CUSTOMIZING E & F WORD PROCESSOR (BOB KITCH)
MAILING LIST UPDATE (KEN CLARKE)
MICRO MAGIC (Sorting)
PROGRAM - MANY HAPPY RETURNS (KEN CLARKE)